Dwyer

ENYE CONTROLS®

MODEL 160G

AVERAGING AIR FLOW GRID

Extends Over 50″ to Aid in Air Flow Output Checks

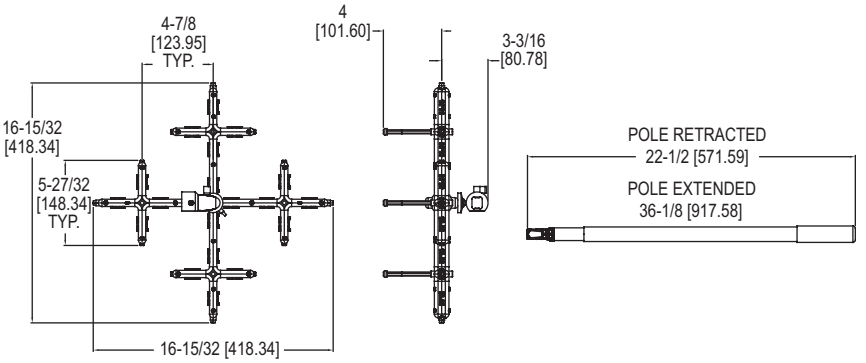

The **Model 160G Averaging Air Flow Grid** utilizes 16 sensing points to provide precision sensing across its 16.5″ (41.9 cm) length and width. The ball pivot joint and tightening nut allows the user to position the sensing grid at any angle in any direction for ease of use in hard to reach locations. The included color coded tubing connects to the integral barbed fittings, providing a differential pressure signal to a gage or manometer where the readings can be converted into a velocity or flow reading.

BENEFITS/FEATURES
- Maximum reach of approximately 48″ (122 cm)
- 16 sensing points provide an accurate average flow

APPLICATIONS
- Measure face air velocity on grills, diffusers, registers, exhaust hoods

MODEL CHART	
Model	**Description**
160G	Averaging air flow grid

SPECIFICATIONS	
Service: Air or compatible gases. **Wetted Materials:** Grid: Black polycarbonate; Ball pivot joint: AL, plastic; Handle: Aluminum; Standoffs: Aluminum with rubber bumpers, two sets: 1.25″ (31.7 mm) and 2″ (50.8 mm), 1/8″ ID / 1/4″ OD; Tubing: Two 10′ (3 m) lengths of silicone rubber. **Accuracy:** ±2% FS.	**Temperature Limits:** -40 to 257°F (-40 to 125°C). **K Factor:** 0.84. **Range:** 1000 to 5000 FPM (5 to 25 m/s). **Process Connection:** 1/8 to 1/4″ ID tubing. **Weight:** 1.75 lb (0.79 kg). **Agency Approvals:** RoHS.

ACCESSORIES	
Model	**Description**
UHH-C2	Protective hard case

UHH-C2

MODEL 485B

THERMO-HYGROMETER

Measures % RH, Temperature, Dew Point and Wet Bulb

CALIBRATION SERVICES AVAILABLE

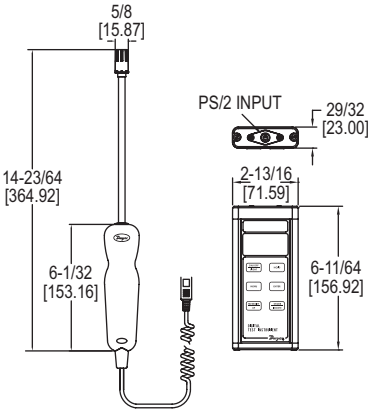

The **Model 485B Thermo-Hygrometer** is a versatile, compact, handheld instrument for measuring percentage of relative humidity and temperature in °F or °C. Dew point and wet bulb temperatures are derived from the relative humidity and temperature measurements and are displayed on the LCD.

BENEFITS/FEATURES
- Compatible with Dwyer AP1 thermo-anemometer and VP1 100 mm vane thermo-anemometer probes (sold separately)
- Hold feature to freeze current readings on the display
- Stores up to 99 readings for future evaluation

APPLICATIONS
- Building commissioning
- Pulp and paper

MODEL CHART	
Model	**Description**
485B-1	Digital thermo-hygrometer includes 9 V battery, sensing probe, wrist strap, soft carrying case and instructions

OPTIONS	
Use order code:	**Description**
-NIST	NIST traceable calibration certificate

SPECIFICATIONS
Service: Humidity, temperature, wet bulb and dew point temperature detection in clean air. **Temperature Limits:** Process: -40 to 176°F (-40 to 80°C); Ambient: 5 to 125°F (-15 to 51°C). **Relative Humidity Range:** 0 to 100% (non-condensing). **Relative Humidity Accuracy:** ±2% FS over 10 to 90% @ 77°F (25°C). **Temperature Range:** -20 to 140°F (-28 to 60°C). **Temperature Accuracy:** ±0.9°F @ 77°F (±0.5°C @ 25°C). **Display:** 4.5 digit LCD. **Resolution:** 0.1%, 0.1°F/°C. **Probe Length:** 8″ (203 mm) insertion. **Power Requirements:** 9 V alkaline battery, included, user replaceable. **Weight:** 16 oz (454 g). **Agency Approvals:** CE.

ACCESSORIES	
Model	**Description**
A-47X-BOOT	Protective magnetic rubber boot
RP1	Thermo-hygrometer % RH and temperature probe with coiled cable