Dwyer

MODEL 480

VANEOMETER™ SWING VANE ANEMOMETER

Use This Sensitive Dwyer Unit to Measure Low Air Velocities — at Low Cost

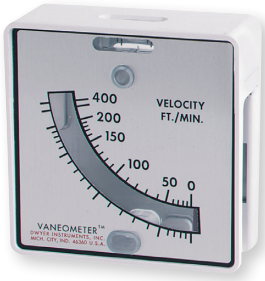

Use a Vaneometer™ swing vane anemometer to measure velocity of air flow into laboratory fume hoods and at paint spray booths to determine when to change filters. Or wherever needed to meet OSHA standards of ventilation for smoke, dust or fume removal.

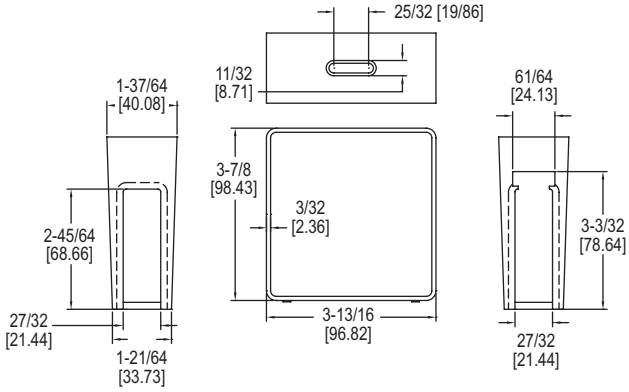

The **Model 480 Vaneometer™ Swing Vane Anemometer** is a durable, economically priced instrument specifically designed to simplify the measurement of low air velocities. It is accurate to ±5% of full-scale to 100 FPM and ±10% from 100 FPM to the top of scale. It has a spirit level to ensure accurate readings and the large scales are easy to read and visible from both sides.

MODEL CHART	
Model	**Description**
480	25 to 400 FPM
M480	0 to 2.0 m/s

BENEFITS/FEATURES

- Small size and weight for easy portability
- Easy to clean ABS plastic housing

ACCESSORIES	
Model	**Description**
A-390	Extra vanes, pkg. of 2

APPLICATIONS

- Measure air flow into laboratory fume hoods

SERIES MARK II

WIND SPEED INDICATOR

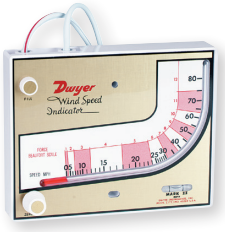

Includes ABS plastic vane, 50´ tubing, mounting hardware and gage fluid.

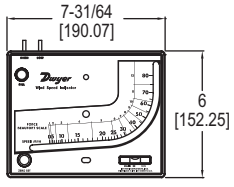

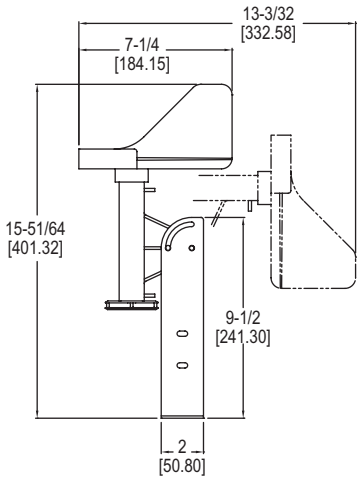

The **Series Mark II Wind Speed Indicator** indicates wind speed directly on the liquid filled scale reading in both miles per hour (0-80) and Beaufort scale (1-12). A metric model is also available, which reads the same as above, but reading 0-130 kilometers per hour. The Mark II Wind Speed Indicator is an accurate, economically priced option for measuring wind speed.

MODEL CHART	
Model	**Scale**
Mark II WSI	mph
Mark II WSI Metric	kph

BENEFITS/FEATURES

- Durable molded white instrument with gold scale
- English and metric units available

APPLICATIONS

- Weather monitoring stations